CITY OF ENGLEWOOD

R.O.W.

(Right of Way)

Permit Application

Office of the City Engineer

Englewood

P.O. Box 228 • Englewood, N.J. 07631

RIGHT OF WAY PERMIT APPLICATION CHECKLIST

Prior to submitting your application for a permit, please verify that the following items/forms have been completed.

1. ESCROW ACCOUNT FORM: _____
2. DESCRIPTION OF WORK FOR BOND ESTIMATE: _____
3. W-9 (IRS FORM): _____

Englewood

P.O. Box 228 • Englewood, N.J. 07631

ESCROW ACCOUNT FORM:

APPLICANT'S NAME: _____

PROPERTY OWNER (if different) : _____

STREET ADDRESS OF WORK: _____

CONTRACTOR: _____

CONTRACTOR'S ADDRESS: Street: _____

City: _____ State: _____ Zip: _____

CONTRACTOR'S PHONE NO.: _____

CONTACT PERSON: _____

SOC. SEC. NUMBER or TAX ID NUMBER: _____

ATTORNEY: _____

ATTORNEY PHONE NO.: _____

CITY OF ENGLEWOOD USE ONLY

ACCOUNT NUMBER: _____

PROJECT NAME: _____

BLOCK: _____

LOT: _____

Englewood

P.O. Box 228 • Englewood, N.J. 07631

DESCRIPTION OF WORK FOR BOND ESTIMATE:

SIDEWALK	No. Square Ft.	_____	Cost Per SF. $4.00	$ _____
APRON	No. Square Ft.	_____	Cost Per SF. $4.50	$ _____
CONCRETE CURB	No. Lineal Ft.	_____	Cost Per LF. $10.00	$ _____
GRANITE BLOCK CURB	No. Lineal Ft.	_____	Cost Per LF. $12.00	$ _____
STREET OPENING				
(Asphalt with Concrete Base)	No. Square Ft.	_____	Cost Per SF. $8.50	$ _____
(Asphalt with Stone Base)	No. Square Ft.	_____	Cost Per SF. $7.50	$ _____
SANITARY CONNECTION	No. of Each	_____	Cost Each $35.00	$ _____
SANITARY DISCONNECTION	No. of Each	_____	Cost Each $35.00	$ _____
OTHER	_____			$ _____
			BOND TOTAL	$ _____

Has Site Plan been filed with the Planning Board? Yes _____ No _____ Not Required _____

The City Engineer requires a minimum of 24 hours notice for inspection of the above mentioned work; Saturday, Sunday and Legal Holidays are not included. Holidays or overtime inspection rate will be deducted from the deposit fee when necessary. The City requires inspection prior to casting of concrete, backfilling of trenches, during the installation of sewer connections and for other work deemed necessary by the City Engineer.

I have examined a copy of the 1973 edition of the standards for the City of Englewood on file at the counter in the City Engineer's Office. Failure to comply with these standards and the above procedure or to correctly compute the value of the work may mean forfeiture of the permit fee.

Penalty: $100.00 fine, 90 days in jail or both.

I certify that the above information is true and correct to the best of my knowledge.

_____ DATE

_____ SIGNATURE

PERMIT NO. _____ BLOCK _____ LOT _____ INSPECTION NO. _____

COUNTY PERMIT NO. _____ CERTIFICATE OF INSURANCE: YES _____ NO _____

Form **W-9**
(Rev. October 2004)
Department of the Treasury
Internal Revenue Service

Request for Taxpayer Identification Number and Certification

Give form to the requester. Do not send to the IRS.

Print or type
See Specific Instructions on page 2.

Name (as reported on your income tax return)

Business name, if different from above

Check appropriate box: ☐ Individual/ Sole proprietor ☐ Corporation ☐ Partnership ☐ Other ▶ ..... ☐ Exempt from backup withholding

Address (number, street, and apt. or suite no.)

Requester's name and address (optional)

City, state, and ZIP code

List account number(s) here (optional)

Part I Taxpayer Identification Number (TIN)

Enter your TIN in the appropriate box. The TIN provided must match the name given on Line 1 to avoid backup withholding. For individuals, this is your social security number (SSN). However, for a resident alien, sole proprietor, or disregarded entity, see the Part I instructions on page 3. For other entities, it is your employer identification number (EIN). If you do not have a number, see *How to get a TIN* on page 3.

Note. *If the account is in more than one name, see the chart on page 4 for guidelines on whose number to enter.*

Social security number
| | | – | | – | | | | |

or

Employer identification number
| | – | | | | | | | |

Part II Certification

Under penalties of perjury, I certify that:

1. The number shown on this form is my correct taxpayer identification number (or I am waiting for a number to be issued to me), and
2. I am not subject to backup withholding because: (a) I am exempt from backup withholding, or (b) I have not been notified by the Internal Revenue Service (IRS) that I am subject to backup withholding as a result of a failure to report all interest or dividends, or (c) the IRS has notified me that I am no longer subject to backup withholding, and
3. I am a U.S. person (including a U.S. resident alien).

Certification instructions. You must cross out item 2 above if you have been notified by the IRS that you are currently subject to backup withholding because you have failed to report all interest and dividends on your tax return. For real estate transactions, item 2 does not apply. For mortgage interest paid, acquisition or abandonment of secured property, cancellation of debt, contributions to an individual retirement arrangement (IRA), and generally, payments other than interest and dividends, you are not required to sign the Certification, but you must provide your correct TIN. (See the instructions on page 4.)

Sign Here Signature of U.S. person ▶ Date ▶

Purpose of Form

A person who is required to file an information return with the IRS, must obtain your correct taxpayer identification number (TIN) to report, for example, income paid to you, real estate transactions, mortgage interest you paid, acquisition or abandonment of secured property, cancellation of debt, or contributions you made to an IRA.

U.S. person. Use Form W-9 only if you are a U.S. person (including a resident alien), to provide your correct TIN to the person requesting it (the requester) and, when applicable, to:

1. Certify that the TIN you are giving is correct (or you are waiting for a number to be issued),
2. Certify that you are not subject to backup withholding, or
3. Claim exemption from backup withholding if you are a U.S. exempt payee.

Note. *If a requester gives you a form other than Form W-9 to request your TIN, you must use the requester's form if it is substantially similar to this Form W-9.*

For federal tax purposes you are considered a person if you are:

- an individual who is a citizen or resident of the United States,
- a partnership, corporation, company, or association created or organized in the United States or under the laws of the United States, or
- any estate (other than a foreign estate) or trust. See Regulation section 301.7701-6(a) for additional information.

Foreign person. If you are a foreign person, use the appropriate Form W-8 (see Publication 515, Withholding of Tax on Nonresident Aliens and Foreign Entities).

Nonresident alien who becomes a resident alien. Generally, only a nonresident alien individual may use the terms of a tax treaty to reduce or eliminate U.S. tax on certain types of income. However, most tax treaties contain a provision known as a "saving clause." Exceptions specified in the saving clause may permit an exemption from tax to continue for certain types of income even after the recipient has otherwise become a U.S. resident alien for tax purposes.

If you are a U.S. resident alien who is relying on an exception contained in the saving clause of a tax treaty to claim an exemption from U.S. tax on certain types of income, you must attach a statement that specifies the following five items:

1. The treaty country. Generally, this must be the same treaty under which you claimed exemption from tax as a nonresident alien.
2. The treaty article addressing the income.
3. The article number (or location) in the tax treaty that contains the saving clause and its exceptions.

Englewood

P.O. Box 228 • Englewood, N.J. 07631

ROAD OPENING EXCAVATIONS WITHIN THE CITY OF ENGLEWOOD RIGHT OF WAY (INCLUDING ROAD WAY AND SIDEWALK AREAS)

PERMIT REQUIRED:
No person shall excavate a road opening or right of way without first obtaining a written permit from the Office of the City Engineer or designee.

Permits may be obtained at the office of the City Engineer, K. Albert Associates, 9 East Street, Englewood, New Jersey 07631.

APPLICATIONS:
An application for such a permit shall include a designation of area where the work is to take place and a plan of the proposed work, including any utility facility which is to be construed, removed or altered in any way, with sufficient detail to enable the Office of the City of Engineer to identify, locate and determine dimensions of the project.

PERMIT FEE:
The fee for a permit shall be $25.00, excluding utility companies.

BOND REQUIREMENTS:
No excavation permit shall be granted to any applicant, excluding utility companies until the applicant shall give a satisfactory bond to the City in such form and for such amount as shall be determined by the Office of the City Engineer in accordance with the fee schedule as of May, 1997, Ordinance 90-09.

COMMENCEMENT AND COMPLETION OF WORK:
The permittee shall advise the Office of the City Engineer, Police Department and Fire Department 24 hours prior to commencement of work.

The permittee shall call 1-800-272-1000 for existing utility markouts prior to commencement. The permittee shall contact the Department of Public Works and the Office of the City Engineer for information relating to storm and sanitary sewers.

During the course of the work the permittee shall maintain safe pedestrian crossing along the line of the work and keep same properly guarded by suitable barricades and warning signs during the day and by barricades and lights by night. All road excavations shall be covered by steel plate when work is complete at the end of the day.

Once commenced, all work shall be performed diligently and as expeditiously as possible and completed in as short a time as possible.

Englewood

P.O. Box 228 • Englewood, N.J. 07631

METHOD OF CONSTRUCTION EXCAVATING, BACKFILLING AND RESTORATION:
The road pavement shall be saw cut with a power saw for all road openings to a minimum depth of 3 inches.

Backfill material shall consist of Quarry Process (QP) stone for the entire depth and width of the trench. The material shall be compacted in 12 inch lifts with a mechanical tamper.

Pavement restoration shall consist of the following:
3 inch thick course Stabilize Base, Mix I-2
2 inch thick course wearing course, Mix I-5

Any concrete sub-bases shall be replaced to match existing limits and depth.

Any damaged sidewalk flags and curbs shall be replaced with full flags and section of curb, no patch work shall be accepted. Concrete curbs and sidewalks shall be constructed in accordance with the standards, see attached detail.

INSPECTION FEES:
All applicants for a permit, including utility companies, shall pay a fee for inspections to be made by the Office of the City Engineer at the computed rate of $110.00 per hour.

INSPECTIONS:
The applicant shall notify the Office of the City Engineer 24 hours prior to schedule an inspection. All work performed in the City Right of Way shall necessitate inspections by the Office of the City Engineer.

Office of the City Engineer:	K. Albert Associates 9 East Street Englewood, New Jersey 07631	(201)569-7590
Office of the City Clerk:	Ms. Lenore Schiavelli	(201)871-6612
Department of Public Works: (Supervisor of Sewers)	Ms. Clyde Sweatt	(201)871-6534
Police Department, Traffic:	Sergeant Barrett	(201)871-6411 (201)568-2863
Fire Department:	Chief Moran	(201)568-6301
Attachments:	APPLICATION FEE SCHEDULE, ORDINANCE 87-14 DETAILS OF SIDEWALK, CURB, APRON ETC..	

Englewood

P.O. Box 228 • Englewood, N.J. 07631

FEE SCHEDULE

PLANNING AND ENGINEERING:		
ENGINEERING AND REVIEW FEES:		$110.00 per hour
LEGAL FEES:		$110.00 per hour
INSPECTION FEES:		
CITY ENGINEER:		$110.00 per hour
ENGINEERING STAFF:		$110.00 per hour
RIGHT OF WAY PERMIT FEE:		$25.00 plus bond
BOND REQUIREMENTS:	RGO 22-16(b)	
CONCRETE CURB:		$10.00 per linear ft.
CONCRETE CURB & GUTTER:		$15.00 per linear ft.
CONCRETE SIDEWALK 5 INCHES:		$4.00 per sq. ft.
CONCRETE SIDEWALK 7 INCHES (apron):		$4.50 per sq. ft.
CONCRETE PAVEMENT:		$7.00 per sq. ft.
ASPHALT CONCRETE BASE:		$8.50 per sq. ft.
ASPHALT STONE BASE:		$7.50 per sq. ft.
UNIMPROVED & PLANTED AREAS:		$3.50 per sq. ft.
MINIMUM FEE:		**$100.00**
SEWERS PERMIT FEE:	RGO 22-36	
CONNECTION TO SANITARY: (residential or commercial)		$35.00
CONNECTION TO SANITARY: (industrial)		$100.00
CONNECTION TO STORM FACILITIES:		$150.00
DISCONNECTION FROM STORM FACILITIES:		$20.00

Englewood

P.O. Box 228 • Englewood, N.J. 07631

CITY OF ENGLEWOOD
ORDINANCE NO. 87-14

Notice is hereby given that the following ordinance was introduced at a Regular Formal meeting of the Council of the City of Englewood on February 17, 1987, and that said ordinance will be further considered for final passage at a meeting of the Council to be held in the Municipal Court Room, 73 South Van Brunt Street, Englewood, Bergen County, New Jersey, on Tuesday, the 3rd day of March, 1987, at 8:00 P.M. o'clock, or as soon thereafter as the matter can be heard.

DATED: Englewood, N.J. February 17, 1987

JACK DRAKEFORD
City Manager/City Clerk

CITY OF ENGLEWOOD
ORDINANCE NO. 87-14

AN ORDINANCE FURTHER AMENDING ARTICLE 1 OF CHAPTER 13 OF THE REVISED GENERAL ORDINANCES OF THE CITY OF ENGLEWOOD RELATING TO THE RECONSTRUCTION AND MAINTENANCE OF SIDEWALKS.

BE IT ORDAINED BY THE COUNCIL OF THE CITY OF ENGLEWOOD, BERGEN COUNTY, NEW JERSEY, as follows:

SECTION 1. Paragraph (7) of Section 13-12(a) of Article 1 of Chapter 13 of the Revised General Ordinances of the City of Englewood, as heretofore amended by Ordinance No. 86-47, relating to the exterior appearance of residential premises and structures, is hereby further amended to read in full as follows:

"(7) Reconstruction and Maintenance of Sidewalks.

Each owner of land abutting or bordering upon the sidewalks of any street or public place shall keep the sidewalks in front of such premises at all times in a safe, passable and orderly condition, free from snow, ice, leaves, grass, weeds, or other debris or obstructions. In the case of cracked, broken or uneven sidewalks, such persons shall reconstruct, replace or reset such portion of the sidewalks so as to correct said condition in accordance with the requirements of Chapter 22 hereof provided, however, that the failure to make said corrections shall not constitute a violation hereof where the owner establishes by a preponderance of the evidence that said conditions has resulted exclusively from the growth of publicly owned shade trees planted by the City or from the installation or removal of street lighting stanchions. In the case there is snow or ice on the sidewalks, such persons shall remove the same within 24 hours of daylight after the snow shall have ceased falling or after the ice has formed."

SECTION 2. Paragraph 7 of Section 12-12(b) of Article 1 of Chapter 13 of the Revised General Ordinances of the City of Englewood, as heretofore amended by Ordinances of the City of Englewood, as heretofore amended by Ordinance No. 86-47, relating to the exterior appearance of non-residential premises and structures, is hereby further amended to read in full as follows:

"(7) Reconstruction and Maintenance of Sidewalks.

Each owner of land abutting or bordering upon the sidewalks of any streets or public place shall keep the sidewalks in front of such premises at all times in a safe, passable and orderly condition, free from snow, ice, leaves, grass, weeds, or other debris or obstructions. In the case of cracked, broken or uneven sidewalks, such persons shall reconstruct, replace or reset such portion of the sidewalks so as to correct said condition in accordance with the requirements of Chapter 22 hereof. In the case there is snow or ice on the sidewalks, such persons shall remove the same within 24 hours of daylight after the snow shall have ceased falling or after the ice has formed."

SECTION 3. If any sentence, section, clause or other portion of this ordinance or the application thereof to any person or circumstance shall for any reason be adjudged by a court of competent jurisdiction to be invalid, such judgment shall not affect, impair or repeal the remainder of this ordinance.

SECTION 4. All ordinances or parts thereof inconsistent herewith are hereby repealed to the extent of such inconsistency.

SECTION 5. This ordinance shall take effect immediately upon passage and publication as required by law.

The Press Journal February 19, 1987 Fee: $50.32

PUBLIC NOTICE
CITY OF ENGLEWOOD
ORDINANCE NO. 87-14

AN ORDINANCE FURTHER AMENDING ARTICLE 1 OF CHAPTER 13 OF THE REVISED GENERAL ORDINANCES OF THE CITY OF ENGLEWOOD RELATING TO THE RECONSTRUCTION AND MAINTENANCE OF SIDEWALKS.

I HEREBY CERTIFY that the foregoing is a true copy of the title of an Ordinance adopted by the Council of the City of Englewood, New Jersey on March 3, 1987

JACK DRAKEFORD
City Clerk

APPROVED
Steven Rothman, Mayor

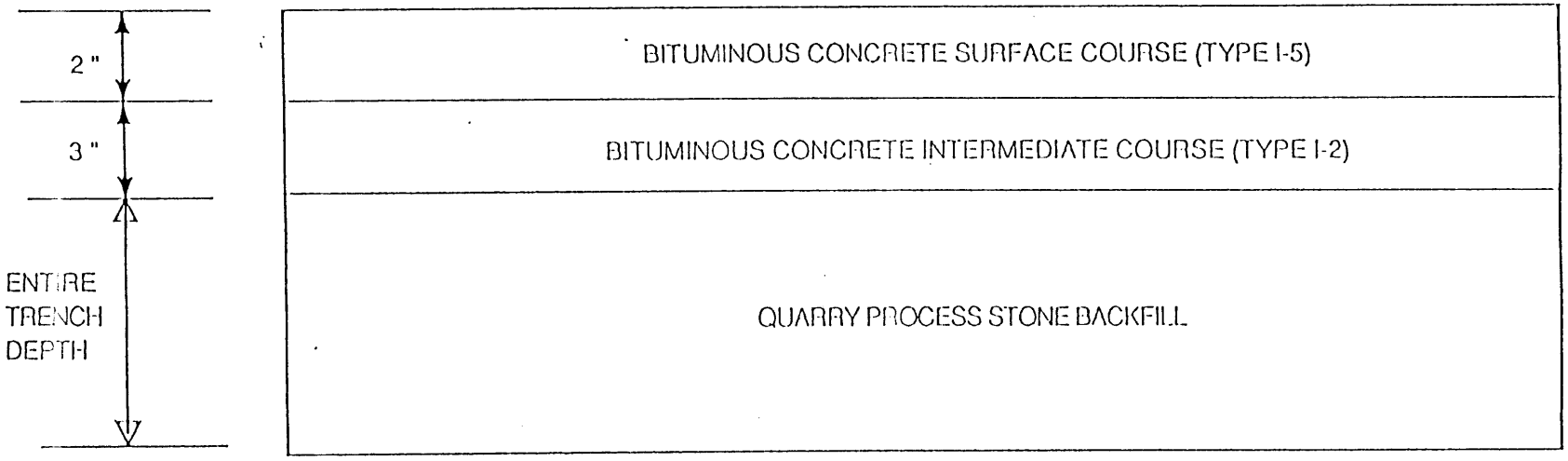

TRENCH PATCH SECTION

NOT TO SCALE

Notes:

1. All edges of pavement shall be saw cut.

March, 1994

CITY OF ENGLEWOOD

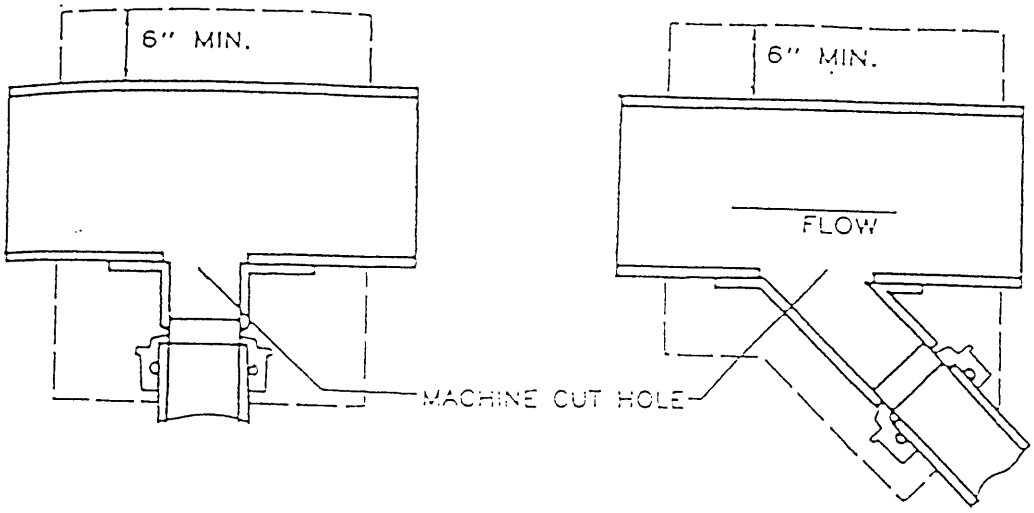

TEE

WYE

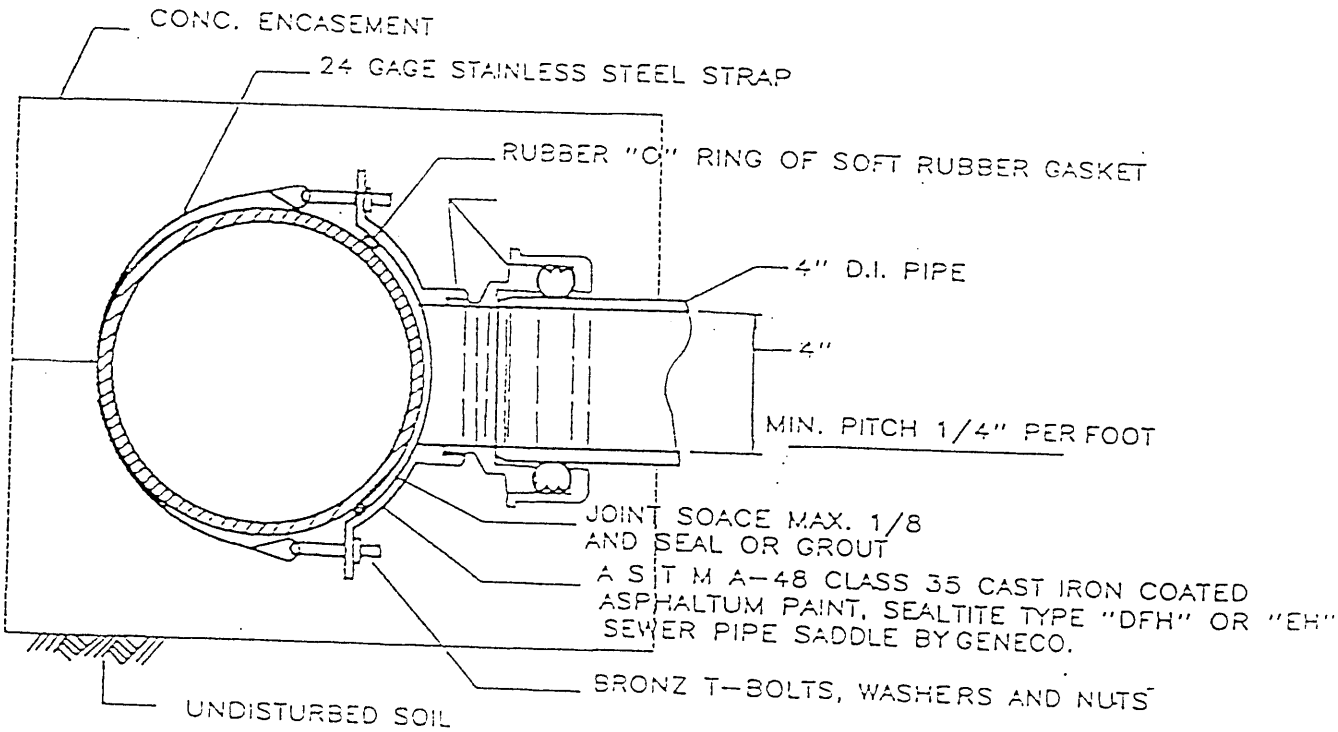

SECTION

CAST IRON SADDLE FOR D.I. BUILDING SEWER

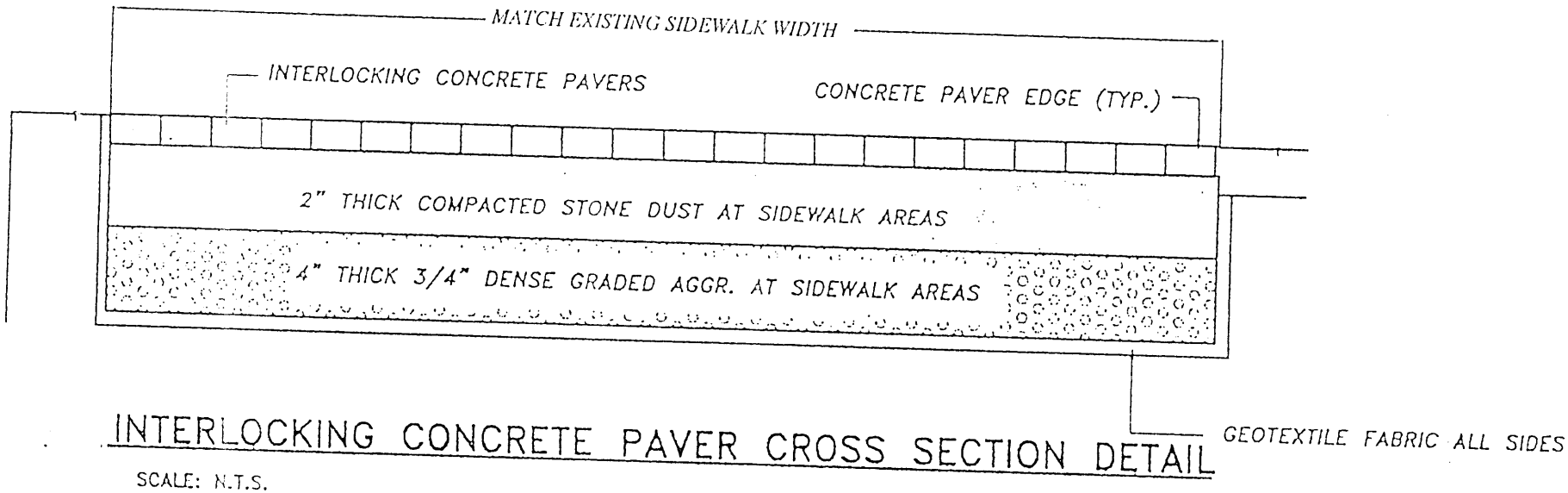

INTERLOCKING CONCRETE PAVER CROSS SECTION DETAIL

SCALE: N.T.S.

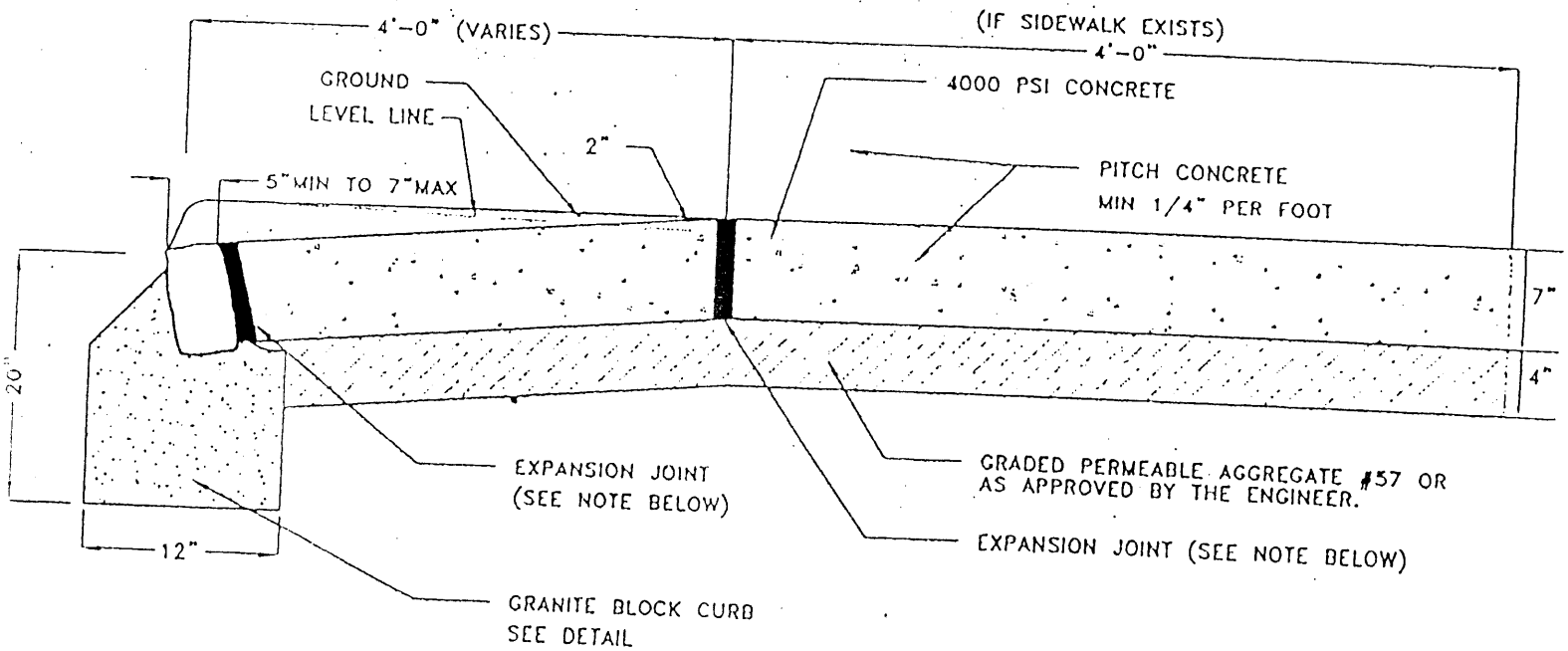

NOTES

1. ALL CONCRETE FOR DRIVEWAY APRONS SHALL BE 4000 PSI AT 28 DAYS.
2. MECHANICALLY TAMP SOIL UNDER ALL CURBS, CONCRETE DRIVEWAY APRONS AND CONCRETE SIDEWALKS.
3. EXPANSION JOINTS, 1/2" WIDE, SHALL BE PROVIDED AT INTERVALS OF NOT MORE THAN 10', AND SHALL BE FILLED WITH PREFORMED BITUMINOUS JOINT FILLER, AASTHO DESIGNATION M33.

PORTLAND CEMENT CONCRETE DRIVEWAY APRON DETAIL

SCALE: N.T.S.

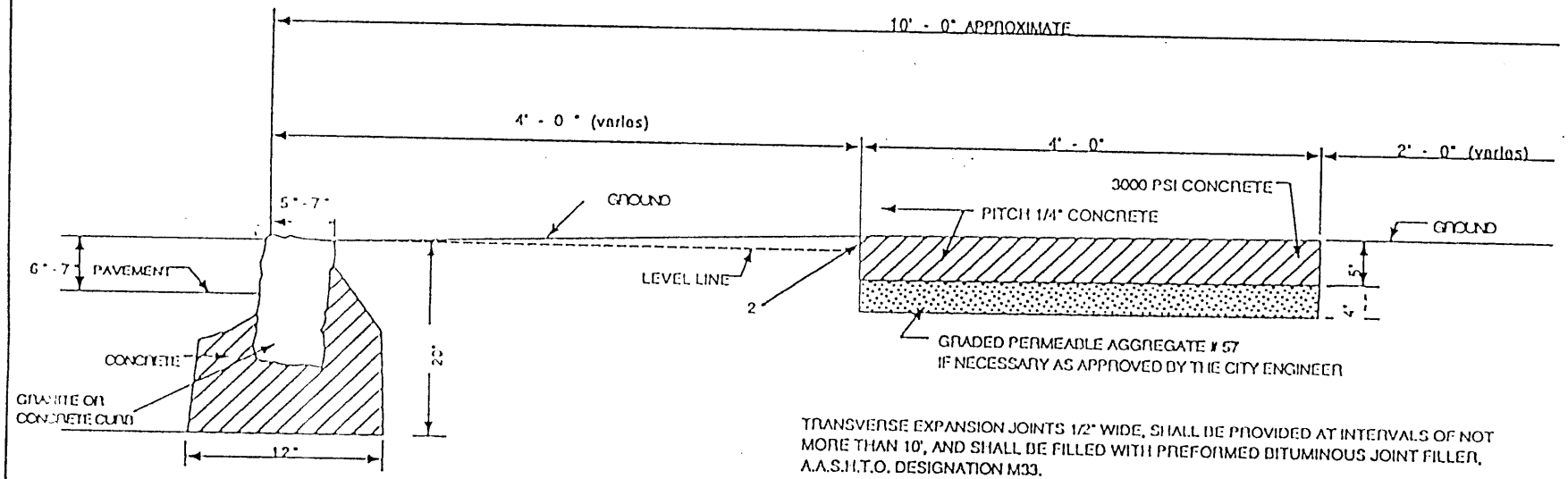

TRANSVERSE EXPANSION JOINTS 1/2" WIDE, SHALL BE PROVIDED AT INTERVALS OF NOT MORE THAN 10', AND SHALL BE FILLED WITH PREFORMED BITUMINOUS JOINT FILLER, A.A.S.H.T.O. DESIGNATION M33.

SIDEWALK DETAIL

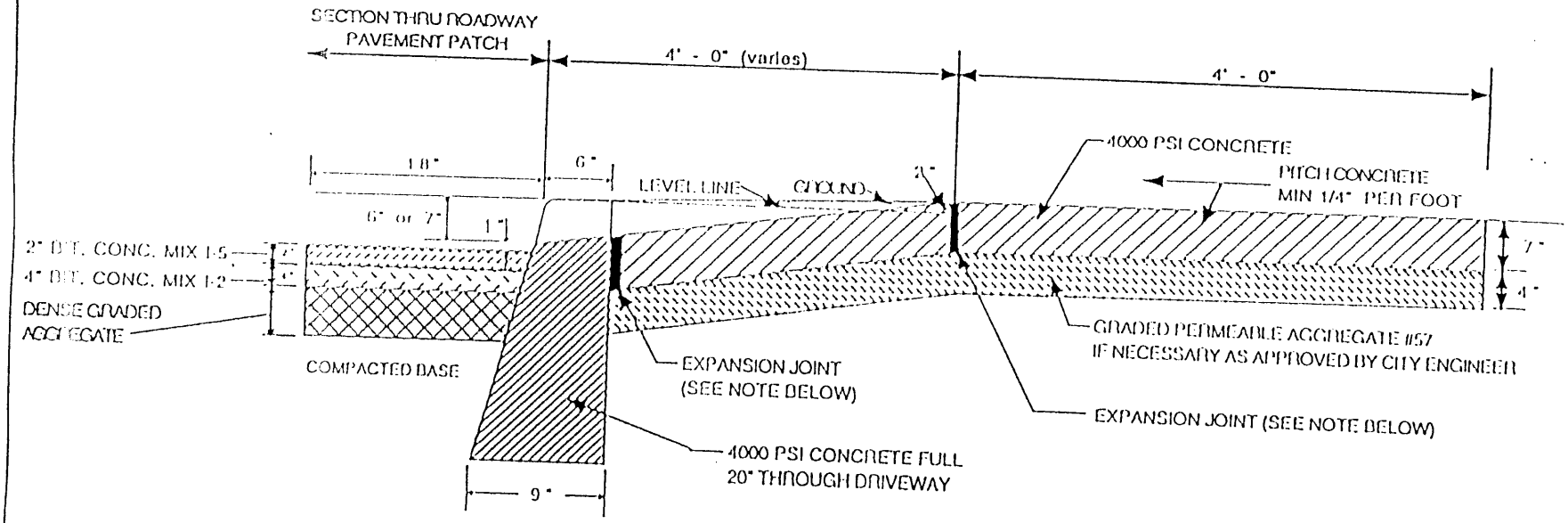

CONCRETE CURB, SIDEWALK & DRIVEWAY APRON DETAIL

NOT TO SCALE

NOTES:

1. All concrete for curb footing shall be 4000 PSI at 28 days.
2. Mechanically tamp soil under all curb footings, concrete driveway aprons and concrete sidewalks.
3. Expansion joints, 1/2" wide, shall be provided at intervals of not more than 10', and shall be filled with preformed bituminous joint filler, AASHO designation M33.

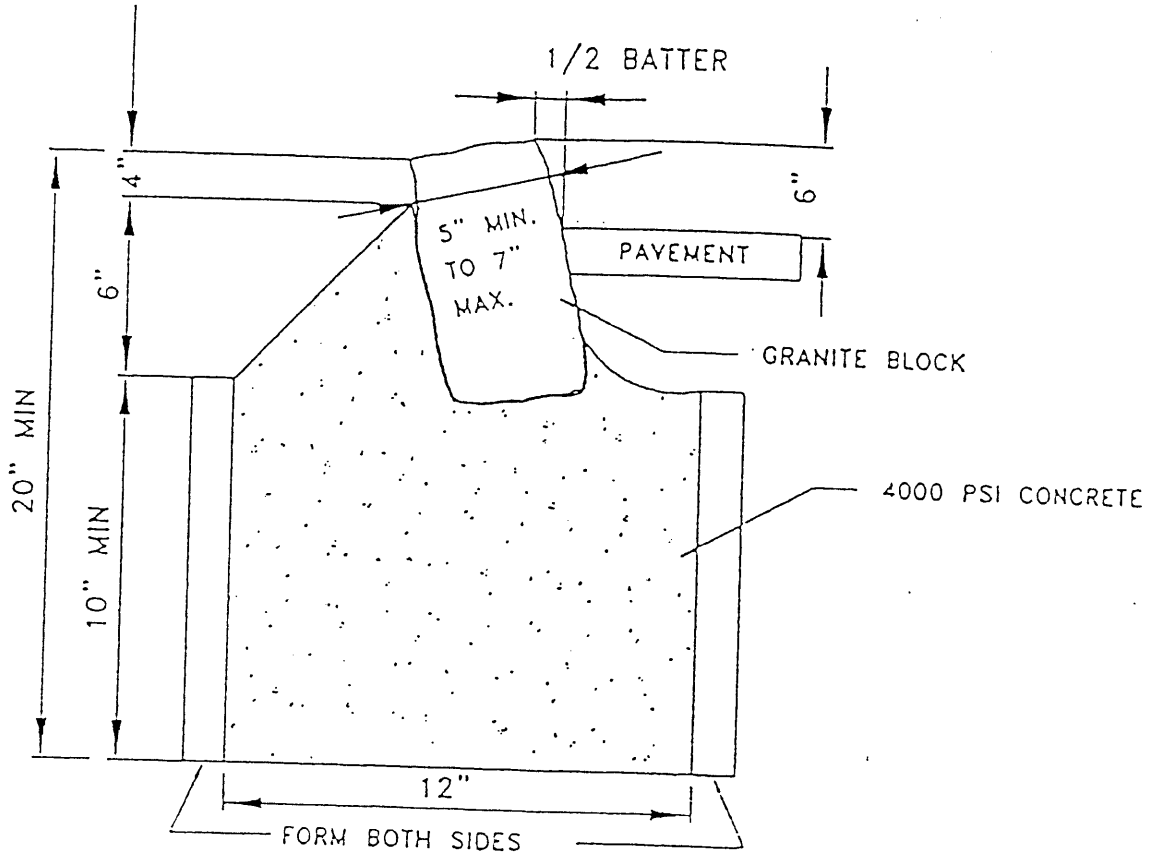

SECTION

SCALE: N.T.S.

NOTES

1. ALL CONCRETE FOR CURB FOOTING TO BE 4000 PSI AT 28 DAYS.

2. USE JUMBO GRANITE BLOCK 5 INCHES TO 7 INCHES IN WIDTH AND 10 INCHES TO 12 INCHES LONG.

3. BETWEEN GRANITE BLOCKS IN CURB, FORM 3/4" CEMENT JOINT STRUCK FLUSH AND POINTED. JOINT MORTAR TO BE 1 PART PORTLAND CEMENT TO 3 PARTS MASON SAND.

4. MECHANICALLY TAMP SOIL UNDER ALL CURB FOOTINGS.

GRANITE BLOCK CURB DETAIL

SCALE: N.T.S.

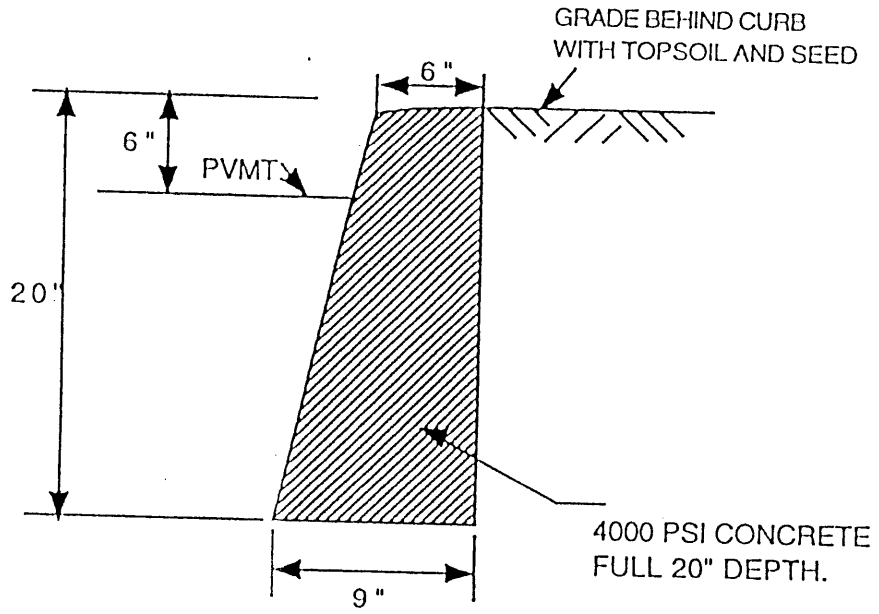

CONCRETE CURB DETAIL

NOT TO SCALE

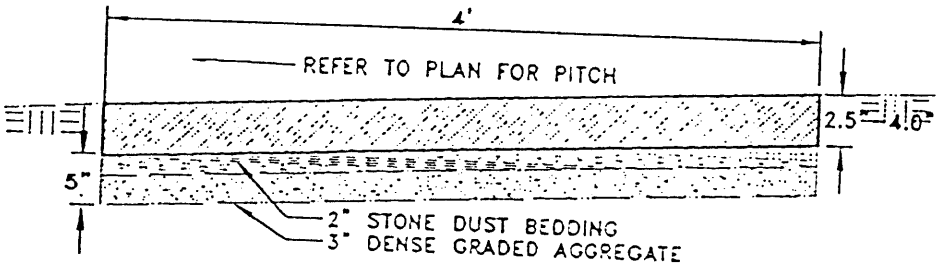

SECTION
SCALE: N.T.S.

NOTES

1. EXISTING FLAGSTONE WALK SHALL BE RESET IN ACCORDANCE WITH THIS DETAIL.
2. PROPOSED FLAGSTONE WALK SHALL BE SET IN ACCORDANCE WITH THIS DETAIL.
3. FLAGSTONES SHALL BE STANDARD 4' WIDE X VARIED LENGTHS OF 2.5', 3', 3.5 AND 4'. FLAGSTONE THICKNESS SHALL VARY FROM 2.5" TO 4". FLAGSTONE LENGTHS SHALL BE SET WITH MIXED LENGTHS AT JOB SITE. THE 2.5' LENGTHS SHALL NOT EXCEED 25% OF TOTAL.
4. FLAGSTONES SHALL BE N.Y. NATURAL CLEFT (TOP FACE ONLY STONE) AS QUARRIED BY THOMPKINS BLUESTONE, HANCOCK, NY AND AS SUPPLIED BY BEDFORD STONE & MARBLE, BEDFORD HILLS, NY (914-666-6404).

FLAGSTONE WALK DETAIL
SCALE: N.T.S.